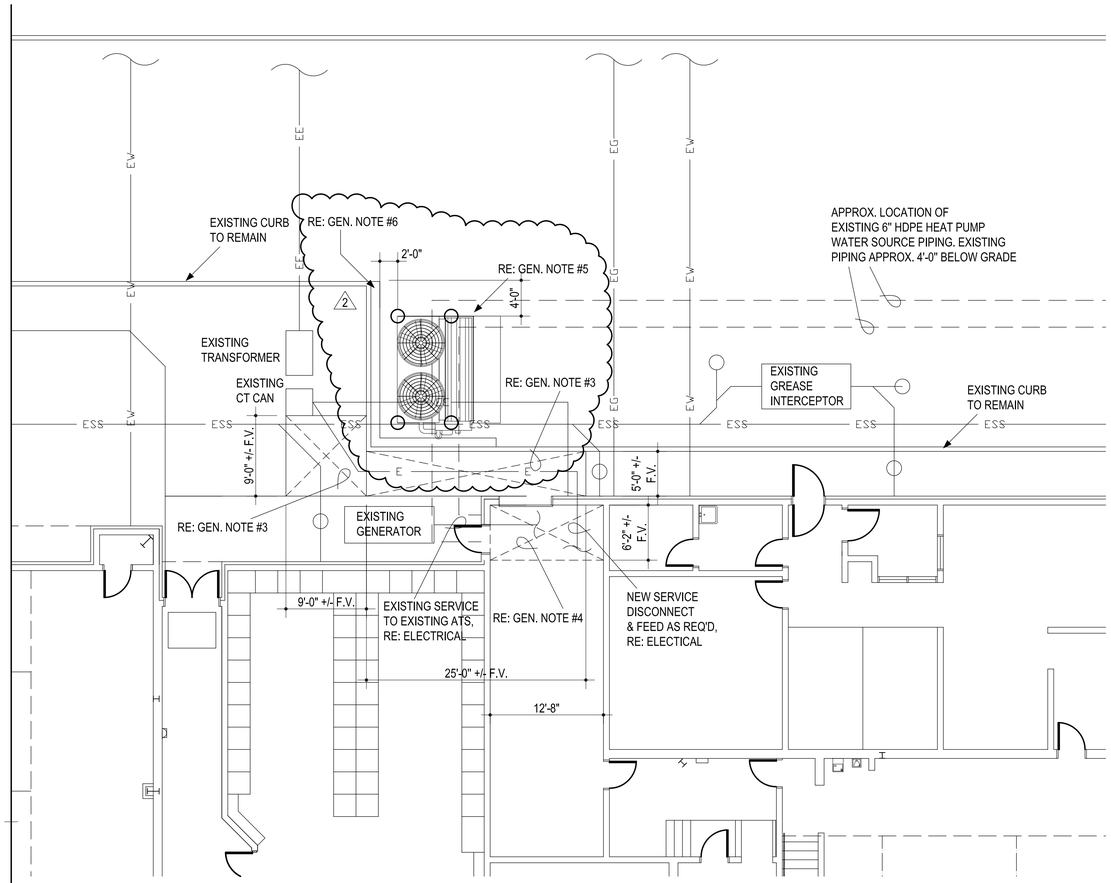

1 COOLING TOWER PLAN

1/8" = 1'-0"

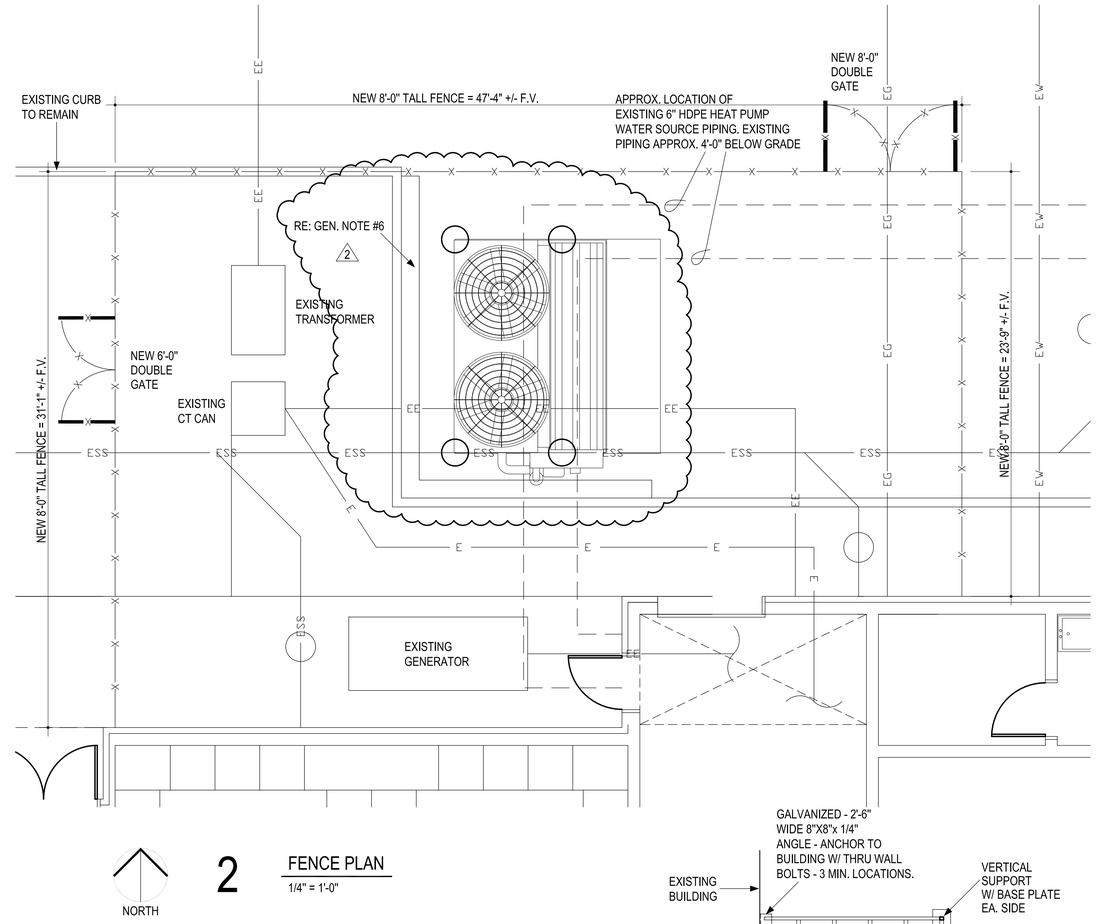

2 FENCE PLAN

1/4" = 1'-0"

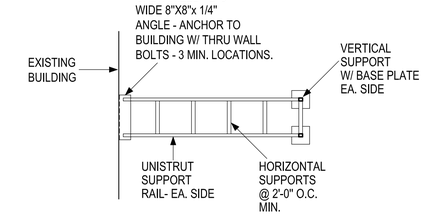

PIPE SUPPORT PLAN

1/4" = 1'-0"

GENERAL NOTES:

1. EXISTING UNDERGROUND UTILITY LOCATIONS HAVE BEEN OBTAINED FROM THE BEST AVAILABLE SOURCES. THE CONTRACTOR SHALL FIELD VERIFY ALL EXISTING CONDITIONS PRIOR TO COMMENCING WORK & COORDINATE W/ ARCHITECT.
2. LOCATE & PROTECT EXISTING UNDERGROUND UTILITIES TO REMAIN.
3. DEMO EXISTING SIDEWALK AS INDICATED. PROVIDE NEW CONC. SIDEWALK AS REQ'D - MATCH EXISTING
4. DEMO EXISTING SLAB AS INDICATED. PROVIDE NEW CONC. SLAB AS REQ'D - MATCH EXISTING
5. NEW COOLING TOWER RE: STRUCTURAL FOR NEW FOUNDATION. RE: MECHANICAL & ELECTRICAL. ADJUST LOCATION AS REQUIRED DUE TO EXISTING UTILITIES, COORDINATE WITH ARCHITECT.
6. DEMO EXISTING SCREEN WALL AND FOOTING. PROVIDE NEW CONC. CURB & SIDEWALK MATCH EXISTING. COORDINATE WITH ARCHITECT. COMPACT & FILL AS REQUIRED.

LEGEND :

ESS	EXISTING SANITARY SEWER
EW	EXISTING WATERLINE
EE	EXISTING ELECTRICAL SERVICE
EG	EXISTING GAS LINE
E	NEW ELECTRICAL

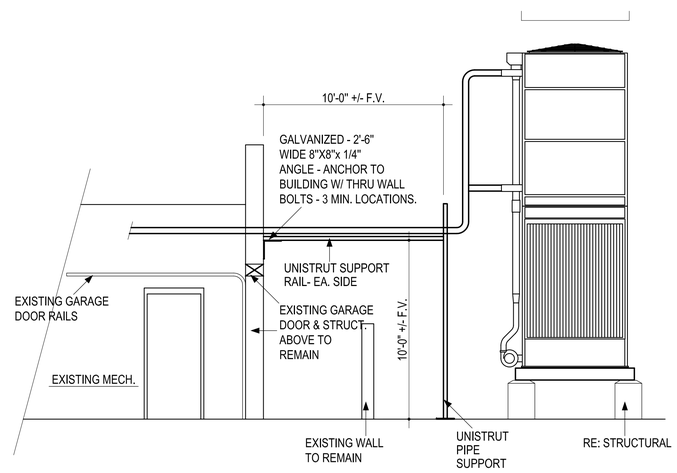

3 PIPE SUPPORT ELEVATION

1/4" = 1'-0"

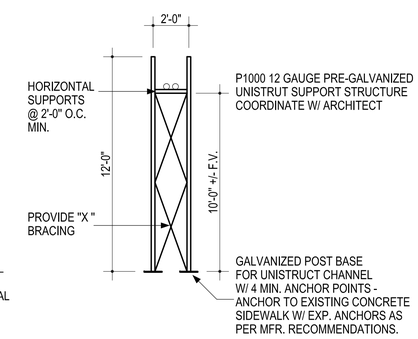

PIPE SUPPORT ELEVATION

1/4" = 1'-0"

GENERAL NOTES:

1. CORE DRILL EXISTING CMU / VENEER WALL AS REQUIRED. VERIFY HEIGHT AND CLEARANCE REQUIRED FOR A COMPLETE INSTALLATION. SEAL AND INSULATE TO WATERTIGHT.
2. ATTACH UNISTRUT SUPPORT TO WALL ANGLE
3. ALL UNISTRUT MATERIALS TO BE 12 GAUGE PRE-GALVANIZED

1 ENTIRE SHEET

AGP
the Abla Griffin Partnership L.L.C.

313 S. E. 5th Street
MOORE, OK. 73160
405.735.3477
AGP@theAGP.net
www.theAGP.net

SALAS O'BRIEN
MECHANICAL / ELECTRICAL

KFC ENGINEERING
STRUCTURAL

STATE OF OKLAHOMA
MICHAEL L. ABLA
2639
REGISTERED ARCHITECT

1/28/26

CG
drawn by

MA
checked by

JANUARY 2026
date

revisions

1 ADDENDUM #1

2 ADDENDUM #2

MOORE PUBLIC SCHOOLS

WAYLAND BONDS
2025 HVAC

sheet no:

C100

COOLING TOWER PLAN

OWNERSHIP USE OF DOCUMENTS:

AGP EXPRESSLY RESERVES ITS COPYRIGHT AND OTHER PROPERTY RIGHTS OF ALL PLANS AND DRAWINGS DESIGNED AND/OR PRODUCED. PLANS AND DRAWINGS ARE NOT TO BE REPRODUCED IN ANY FORM OR MANNER WITHOUT THE EXPRESSED WRITTEN CONSENT OF AGP.

Wayland Bonds Elementary Fencing

14025 S. May Ave.
Oklahoma City, OK 73170